Welcome To Agi-Drive

Graeme Britten
Director
90 Grant Road
Somersby NSW 2250
Mobile: +61 408 611 447
Email: enquiries@agi-drive.com.au
Web : www.agi-drive.com.au

Agi-Drive Quick Operators Guide
CCU (Cab Control Unit)

*1– **Plantmix;** Revs the truck up to 1650 RPM and puts the barrel into full mix. Press plant mix button to load vehicle when under the plant*

*2– **Transit;** Puts the barrel into a slow preset mix for transit to the job and limits it from spinning faster when you put you foot on the throttle once finished loading Press the Transit button to slow engine revs & barrel speed down automatically from plantmix. this also stops discharge being activated accidentally over 15 KPH mix or disc buttons will manually override the transit speed.*

*3- **Discharge;** Pressing or holding the Disc button will turn the barrel in a clock wise direction and pour concrete into the chute at the back of the truck. this function will not work in transit or when over 15KPH on V6 CanBus enabled CCU*

*4- **Mix;** Pressing or holding the MIX button will turn the barrel in an anti-clock wise direction when viewed from the lump stand and mix the concrete towards to front of the truck. pressing MIX once should make the barrel turn very slightly and will incrementally increase the more times you press it. or hold MIX to increase the barrel speed quickly.*

*5- **Stop & Resume;** Pressing the stop button will stop the barrel from turning, by pressing the resume button it will automatically resume spinning in the same direction and speed previously to pressing the stop button.(this works great for barrow jobs as it is much quicker to get the barrel to the same RPM)*

*6- **Chute Up/Down;** Pressing or holding the Chute up or Chute down buttons will make the concrete chute at the back on the truck go up and down, as well as the switches at the back of the truck on the emergency stop enclosure.*

*7- **Revs Up/Down;** Pressing or Holding the Revs Up button will rev the truck RPM up to a Set Maximum which can be adjusted by an authorised agi-drive technician. Pressing or holding the Revs down button will slow the RPM of the truck down to idle.*

*8- **Worklight;** To operate the worklight at the rear of the truck hold down the shift key then press Chute Up to toggle worklight on/off*

Flood light will automatically turn off over 15 KPH

*9- **Turning off (remote missing buzzer)***
Hold down shift key then press transit button.
To toggle on/off (note: on V6 CCU buzzer will not sound until truck is put in gear as to stop the buzzer sounding when using remote in cabin of truck)

10- ***Check remote battery voltage & charge status;***
Hold down shift key then press plant mix button To toggle on/off

11- ***Check stuck button history;***
Hold down shift key then press chute down.
Gives a history on any stuck button

12- *Driver must operate emergency stop at least once per week. A counter is displayed on the opening screen when CCU is first powered on.*
It must not pass a count of 240

E.G :- E/STOP CNT = 25

13- ***Tuning in a new remote(Ten Button)***
Hold down shift key then press the mix button.
A menu screen will appear on the CCU display.
(Resume Button: To Tune, Stop Button: To Erase)
pressing the resume button will start the tuning process while pressing the stop button will erase all remotes tuned into the CCU.

Once you press the resume button the RPM bar graph will light up indicating it is waiting to tune in a remote. hold any button on the remote you wish to tune in and the bar graph will flash indicating successful tuning of the remote.

Please note there is 30 second window to complete the tuning process, before tuning menu times out.

14- ***<u>Tuning in a new remote(12 button);</u>***
Hold down the shift button and press the mix button, a message will appear on the CCU display
"pairing..." and the RPM bar graph will light up. Press and hold the ***resume*** *button on the remote until the bar graph flashes indicating the remote is successfully paired.*

15- ***<u>To Display Thermo Fan Current and Temperature;</u>*** Hold down shift key then press Discharge button to toggle on/off (only enabled with upgraded SSR fan controller)

Agi-Drive Quick Operators Guide
(Remote Control)

12 Button

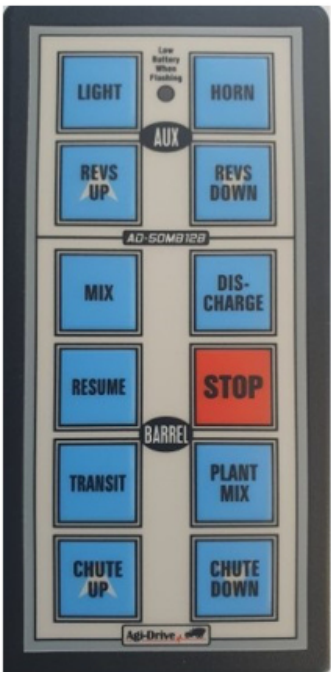

10 Button

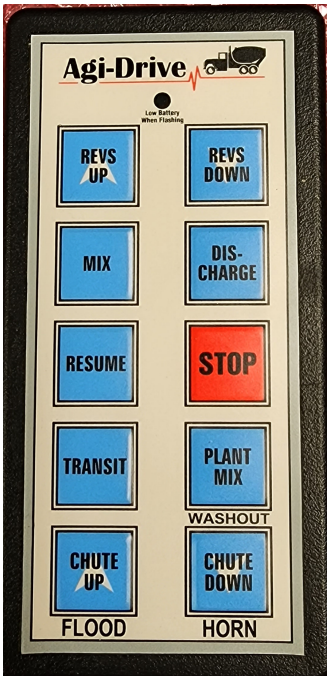

To activate the HORN on 12 Button remote

Press the top right button labeled **HORN** and the truck horn will sound for as long as you hold you finger on the button

To activate the HORN on 10 Button remote

Hold down **STOP** and press **CHUTE DOWN** to sound the horn on the truck. releasing any of those buttons will stop the horn from sounding

To activate the Work Light on a 12 Button remote

Press the button labeled **LIGHT** once to toggle the work light **ON,** and then again to toggle it **OFF**

To activate the Work Light on a 10 button remote

Hold **STOP** and press **CHUTE UP** to toggle the work light **ON**, and then again to toggle **OFF**

Revs Up/Down;

Pressing or Holding the Revs Up button will rev the truck RPM up to a Set Maximum which can be adjusted by an authorised agi-drive technician. Pressing or holding the Revs down button will slow the RPM of the truck down to idle.

Mix; *Pressing or holding the MIX button will turn the barrel in an anti-clock wise direction when viewed from the lump stand and mix the concrete towards to front of the truck. pressing MIX once should make the barrel turn very slightly and will incrementally increase the more times you press it. or hold MIX to increase the barrel speed quickly.*

Disc; *Pressing or holding the Disc button will turn the barrel in a clock wise direction and pour concrete into the chute at the back of the truck. this function will not work in transit or when over 15KPH on V6 CanBus enabled CCU*

Transit *Puts the barrel into a slow preset mix for transit to the job and limits it from spinning faster when you put you foot on the throttle once finished loading Press the Transit button to slow engine revs & barrel speed down automatically from plantmix. this also stops discharge being activated accidentally over 15 KPH mix or disc buttons will manually override the transit speed.*

Plantmix; *Revs the truck up to 1650 RPM and puts the barrel into full mix. Press plant mix button to load vehicle when under the plant*

Chute Up/Down; *Pressing or holding the Chute up or Chute down buttons will make the concrete chute at the back on the truck go up and down, as well as the switches at the back of the truck on the emergency stop enclosure.*

Additional Can Bus Functions

1- Transit discharge Lock

Vehicle cannot engage discharge while vehicle is moving greater than 15 KPH.
If vehicle is stationary with discharge operating, then proceeds to drive away, once 15 KPH or greater is achieved then discharge will be stopped automatically.

2- If operator forgets to turn off rear work light at night or day from either remote or CCU and commences to drive away, once 15 KPH or greater is achieved then the work light will be automatically turned off.

Cab Control Unit (CCU)

Display

Displays operational and error messages.
If sensor is fitted to barrel will also display Barrel speed.

Charging Cradle

Recharges remote Battery
Charge LED Will flash when charge is complete.

Charge Indicator

on when charging
flash when charged

Revs

Displays engine revs in a bar graph format. Lighting up from bottom to top as vehicles revs increase.

Hydraulics

Displays commanded`barrel speed in a bar graph format. Lighting up from bottom to top as barrel speed increases.

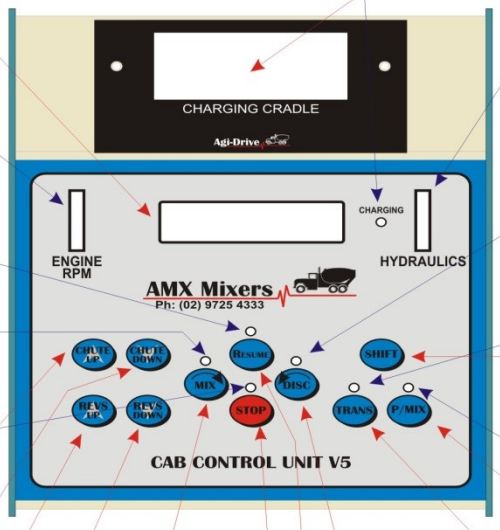

Resume Indicator

Lit when the resume button is pressed.

Mix Indicator

Lit when barrel is in mix direction.

Stop Indicator

Lit when stop activated

Discharge Indicator

Lit when barrel is in discharge direction.

Transit Indicator

Lit when transit function (travelling to job) is activated.

Plant mix Indicator

Lit when plant mix operation (fast mix & 1800 rpm) is activated.

Chute up 9

Raises Chute

Shift Key 11

Shifts the function of buttons 1 - 11

Chute Dn 10

Lowers Chute

Mix 3

Pressed once will Increase barrel speed in mix direction by 0.5 rpm. If held will automatically repeat the 0.5 rpm increase at 0.25 of a second intervals to full mix speed.

Discharge 4

Pressed once will decrease barrel speed in discharge direction by 0.5 rpm. If held will automatically repeat the 0.5 rpm decrease at 0.25 of a second intervals to full discharge speed.

Transit 7

Will place barrel speed to approx. 1 rpm and return engine revs to idle if required, ready for travelling to job.

Revs Up 1

Will only increase engine revs when vehicle is in neutral for Automatic trucks

Plant Mix 8

Will raise barrel speed to full mix and increase engine revs to approx 1800 rpm.

Revs Down 2

Will decrease engine revs.

Stop 6

Will suspend any action previously occurring.

Resume 5

Will revert back to last action before stop was initiated.

Main Control Buttons

Remote Control

The remote buttons perform the same function as the main Electronic Control Unit (ECU) buttons.
The remote has a operating range in excess of 100 metres which give it excellent sensitivity in close ranges.
It is durable and is rated IP67, meaning it is water resistant.

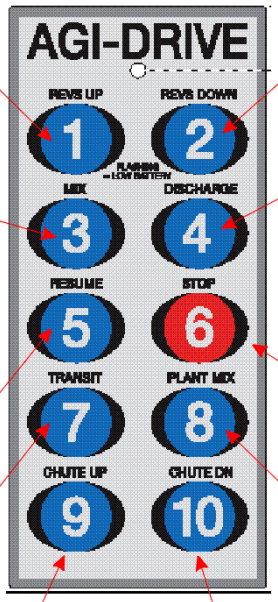

Revs Up 1
Will only increase engine revs when vehicle is in neutral For Automatic trucks

Mix 3
Pressed once will increase barrel speed In mix direction by 0.5 rpm. If held will automatically repeat The 0.5 rpm increase At 0.25 of a second Intervals to full mix speed.

Resume 5
Will revert back to last action before stop was initiated.

Transit 7
Will place barrel speed to approx. 1 rpm and return engine revs to idle if required, ready for travelling to job.

Chute up 9
Raises rear chute

Chute dn 10
Lowers rear chute

Revs Down 2
Will decrease engine revs.

Discharge 4
Pressed once will decrease barrel speed in discharge direction by 0.5 rpm. If held will automatically repeat the 0.5 rpm decrease at 0.25 of a second intervals to full discharge speed.

Stop 6
Will suspend any action previously happening

Plant Mix 8
Will raise barrel speed to full mix and increase engine revs to approx 1800 rpm.

Emergency Stop

The Emergency stop button (E/Stop) is a vital safety component of the Agi-Drive System.
Its function is to instantly stop barrel rotation and return throttle to idle.
The E/Stop is located at the rear of the truck on both sides to give easy access for operators.
The system is a “Duplex (double) contact system and is set up in such a way to maximise safety and reliability of stopping.

a manual Chute Switch is integrated into both E/STOPS on both sides of the truck to allow for ease of use or a back up when the remote isn't working

Agi-Drive.com.au

For those who want to know just how much grunt this system really has.

So put your glasses on lads, here comes the fine print!!! The Agi-Drive Concrete Truck control system has been created from the ground up. The target has been to produce a unit that the drivers love, is simple to use, has safety as a high priority, and can be continually improved. We want to provide a unit that is the best. We welcome all opinions, particularly those of the driver, as he is the one who must use it.

There are 8 main control Buttons:

1. Revs Up Pushing this button will rev the engine up. If the truck is in gear though, the program (software) in the "brain" will not allow this to happen and will beep as a warning. If the engine is electronically controlled (such as an "ISC" Cummins), a voltage signal is used which allows accurate and repeatable throttle control. All other throttle types can also be accommodated with Agi-Drive, be it "cruise control" , fast idle solenoid" , "pneumatic cylinder" or "linear actuator".

2. Revs Down This button will slow the engine down. Both Revs buttons can also adjust Plant Mix Rev Speed.

3. Mix This button will make the barrel go in the mix direction and increase it's speed if continuously pushed. The button can also be held down and the speed will continuously change. If the barrel was discharging, this button will slow the discharge speed down. It can also be used to adjust Transit & Plant Mix speeds, even while driving.

4. Discharge This button behaves in the same manner but opposite to the Mix button. If the driver pushes the Stop button and then pushes the Discharge button, the barrel will start to discharge at the first speed that is set in the program. We call this initial speed "Hydraulic Offset". Its value is fixed as a "Menu" value but can be adjusted if need be. Menus are normally not altered by the driver, but it's good to know they are there. More about Menus later.

5. Resume This button has proved to be the most misunderstood by new drivers. It makes the Barrel and engine Revs (if fitted to an electronic engine), RESUME back to the same value as before. It is extremely usefull when stopping and starting the discharge such as when on a concrete pump. Normally, the driver will arrive on site and after preparations start the discharge , adjusting the speed of discharge with the Discharge and Mix buttons. When the driver needs to Stop the discharge he (or she as the case may be) pushes the STOP button and the barrel Stops!. When the same discharge speed is required again , as on a pump , simply push RESUME. The Barrel will start discharging again at the same speed as before. The speed of discharge can then be adjusted again with the Mix

and Discharge buttons. Every time Resume is pushed, the last speed setting is recalled.

6. STOP Well STOP is just that. It STOPS the Barrel turning immediately. It can be used at any time. On trucks fitted with an ISC Cummins, the STOP button will also make the Revs return to idle. The only time it is recommended not to use Stop is after Plant Mix, as Stop immediately cuts power to the hydraulics , and this will put high stress levels on the drive. (See Transit)

7. Transit. This button is used normally after Plant Mix. It makes the engine return to idle and puts the barrel into a slow mix speed ready for driving to the job. A built in feature of Transit is that when selected, the program will "ramp down" gently the speed of the barrel from fast (Plant Mix) to slow. This reduces stress and wear and tear on the hydraulic drive. The Transit ("Preset") speed that the barrel goes to when the button is pushed is normally preset in the menus, and the driver should not have to worry about it, but it can easily be changed. As mentioned earlier, the Transit speed, when selected, can be adjusted on the go with the Mix and Discharge buttons. (This does not alter the "Preset" speed) If the hydraulic drive has been fitted with a "speed pickup sensor" , that signal is used to maintain the slow mix speed of Transit despite the variations of the engine revs as the truck drives along the road. This feature is heavily recommended for the sake of longevity of the barrel. Having a speed sensor will also enable the R.P.M. readout on the AgiDrive display.
Another important feature of transit is what we call (**TRANSIT LOCK**) once the transit button has been pressed, transit lock is engaged, and this is where discharging can not be operated until the stop button has been pushed. This safe guards the accidental use of discharge when travelling to the job.

8. Plant Mix. Use this button when ready to load the truck or to add water. It makes the barrel hydraulic drive go into fast mixing speed and revs up the engine. These speeds are "presets" in the menu and although have default values, can easily be adjusted. These adjustments can normally be done "over the phone".

9. Shift Key. This button shifts the functions of buttons 1 to 10.
Active shift buttons are as follow.

(Shift) + (plant mix) = Display Remote Battery voltage & charge status
(Shift) + (transit) = **Turn on/off Remote missing buzzer**
(Shift) + (stop) = Enter Menu Mode (hold for 20 seconds) V5
(Shift) counting down = **Enter Menu Mode with code V5.2 or later**
(Shift) + (chute down) = Stuck Button History
(Shift) + (chute UP) = Turn on/off Rear light, Toggle
(Shift) + (Mix) = Tune new remote
(Shift) + (Discharge) = Display thermo fan temp/Current

Remote alternate functions
(Stop)+ (Chute up) = turn on flood lights, toggle
(Stop)+ (Chute dn) = turn on Horn, Momentary
(Stop)+ (P/Mix) = Wash Out Function, Momentary

OTHER STUFF:

EMERGENCY STOP TEST (carried out at start up).
This forces the driver to regularly test his or hers Emergency stop button at the rear of the vehicle. This is done to maintain a correct working E/STOP button, giving added safety to operation of the barrel.
We achieve this regular checking by monitoring the amount of times the driver turns on the ignition key to his/her truck at boot up (ccu powers up). This is displayed as a number count on the bottom line of the display (CCU) EG. (E/STOP CNT = 23) which simply means the driver has turned on his ignition key 23 times & has not operated the emergency stop button. When the emergency stop button is pressed during normal operation of the Agi-Drive system, this number count will be reset to zero.

If the number count gets to 230 ignition key on's the Agi-Drive displays an error message (EMERGENCY STOP TEST REQUIRED)to the driver, indicating he has not tested he emergency stop button for 230 times. If he continues to 240 times the Agi-drive system waits until he has done so, and will not enter normal operating modes. (If however there is a badly concreted E/STOP button, the driver can override this waiting period by hitting the stop button on the CCU ONLY. which will allow him into the normal operating modes.
But however, next time the ignition is turn on again the same warning messages will again display, forcing repair of E/Stop.

There are many other inbuilt features of the Agi-Drive system not immediately obvious. Such as a gentle beeper to warn the driver if the truck is in gear and discharge is selected. There is the Emergency Stop button on the back of the truck which instantly forces the barrel to STOP, and flashes (**Emergency Stop Activated**) on the **CCU** display (cab control unit). There is also a feature where the driver is forced to regularly test the correct function of the Emergency Stop button, covered previously.
The display in the cab also has the ability to give the driver assistance regarding operation through the use of messages such as when the Emergency Stop button is accidentally pushed, Also discussed previously.. We at Agi-Drive are constantly striving to improve our product. Another feature just added is the remote missing beeper & display message on the **CCU** when the remote is not in its charging cradle.. There's a barrel hour counter (if requested) that can be accessed to indicate how old the barrel is. Our web site will also be updated as we progress. Well we hope this has given you an idea, and please feel free to contact Graeme (0408 611 447) if need be. Looking forward to being of service to you.

REGARDS: THE BOYS FROM AGI-DRIVE

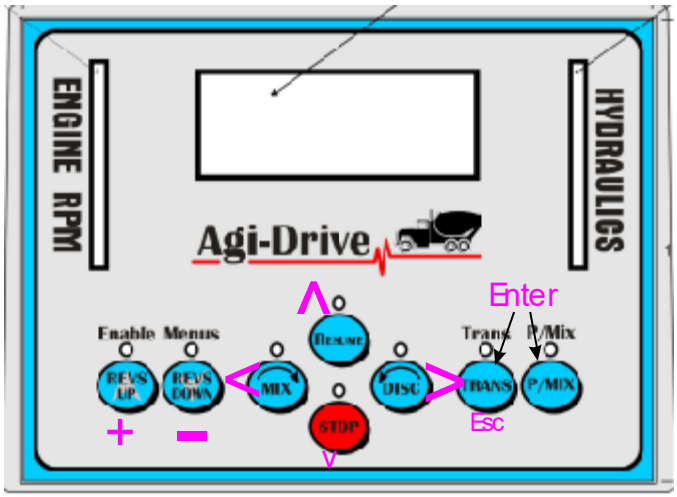

Menu Details are as follows

Menu 1-	To adjust rpm lower limit
Menu 2-	To adjust rpm upper limit
Menu 3-	To adjust hydraulic lower limit
Menu 4-	To adjust hydraulic upper limit
Menu 5-	To calibrate displayed engine rpm to true engine speed
Menu 6-	To set transit speed & constant barrel speed settings
Menu 7-	To set throttle ramp time. (How fast the rpm or hydraulics increase or decrease)
Menu 8-	To set hydraulic ramp time. (How fast the rpm or hydraulics increase or decrease)
Menu 9-	To turn on or off transit feed back (1-2rpm constant barrel speed)
Menu 10-	To turn on or off transit barrel speed lock (Concrite)
Menu 11-	To activate closed loop feedback (speed sensor fitted to barrel) reads barrel speed
Menu 12-	To set throttle increment
Menu 13-	To set Hydraulic increment
Menu 14-	To set Neutral switch input (1= positive/ link removed.) (0= negative/ link on)
Menu 15-	To set RS485 Radio Remote (0 = RS485 remote) (1 = on board aerial)

List of on screen commands

>	=	To enter & change a value
<	=	To exit & save a value chosen
^	=	To go up one menu eg. From menu 1 to menu 2
V	=	To go down one menu. eg. From menu 2 to menu 1
+	=	To increase a value while in the menu to be changed. Eg settings revs (+ will increase revs)
-	=	To decrease a value while in the menu to be changed. Eg settings revs (- will decrease revs)
Esc	=	Will escape out of a menu back to main menu (0) or pressed twice will escape back to main operating system the driver uses once all settings have been made.

Enter = Agi-Drive V4 Press & hold P/Mix & Transit buttons simultaneously for twenty seconds, then release.
Enter = Agi-Drive V5 Press & hold shift & stop buttons simultaneously for twenty seconds, then release.
Enter = Agi-Drive V5.2 or later Press & release shift button after ignition key on, while counting down, then when requested Enter code.
. All these commands & explanations are on screen while in the menu mode
The bottom line of screen gives helpful instructions how to store, enter a menu etc.

Abbreviations

L/L = Lower Limit
U/L = Upper Limit
R/T = Ramp Time

TFB = Transit Feed Back
HSC = High Speed Counter

Menu 1
Setting throttle lower limits

- **(>)**enter menu 1, Then using the + - keys, to set throttle lower limit.
- This is a setting of between (0-255) . For cruise control or linear actuator, this setting is left at (0)
- (<) Entering this key will now store new settings & return you to main menus (1-16)

Menu 2
Setting throttle upper limit

- **(>)**enter menu 2, Then using the + - keys, to set throttle upper limit
- This is a setting of between (0-255) . For cruise control or linear actuator, this setting is left at (255)
- (<) Entering this key will now store new settings & return you to main menus (1-16)

Menu 3
Setting Hydraulic lower limit

- **(>)**enter menu 3, Then using the + - keys, to set Hydraulic lower limit
- This is a setting of between (0-255) this is set to a number that, just allows the barrel to start turning, usually in the range of (10-50)
- (<) Entering this key will now store new settings & return you to main menus (1-16)

Menu 4
Setting Hydraulic upper limit

- **(>)**enter menu 4, Then using the + - keys, to set Hydraulic upper limit.
- This is a setting of between (0-255) . this is set to a number that, gives full barrel speed, and 1.2 amps to Rexroth valve in full mix or discharge settings. Usually around (112). Any more will saturate mix/discharge valve giving no more barrel speed & may damage valve with excess current.
- (<) Entering this key will now store new settings & return you to main menus (1-16)

Menu 5
Calibrating rpm signal

- **(>**)enter menu 5, Then bring the engine revs to 1000 rpm on vehicles tacho, once rpm is at 1000 rpm (<) store this setting to memory, AGI-DRIVES will now work out the calibration factor so as to give a correct rpm read out on CCU..& return you to main menus (1-16)

Menu 6
Setting Transit Speed

- **(>**)enter menu 6, Then using the + - keys, set barrel speed to desired transit speed at idle
- (Being 1-2 pm). Once done use (**<** **)** the store key to store the idle settings.
- Next (IF TRANSIT FEED BACK IS ENABLED) AGI-DRIVE will ask you to enter a transit speed constant. This number being between (1-30.)
- 1 representing a less aggressive barrel speed reduction & 30 being the most aggressive barrel speed reduction at full revs. This setting is normally preset & does not need adjusting, although mechanical tolerances between hydraulic pumps can vary, so adjustments can be made as required.
- (**<**) Entering this key will now store new settings & return you to main menus (1-16)

.

Menu 7
Setting Throttle ramp time

- **(>**)enter menu 7, Then using the + - keys, to set Throttle ramp time.
- This is a setting of between (0-20) . this is set to a number that, gives a desired amount of time between each throttle increment. The larger the number, the more time between throttle increments, thus giving more time to reach maximum throttle speed.
- (**<**) Entering this key will now store new settings & return you to main menus (1-16)

Menu 8
Setting Hydraulic ramp time

- **(>**)enter menu 8, Then using the + - keys, to set Hydraulic ramp time.
- This is a setting of between (0-20) . this is set to a number that, gives a desired amount of time between each Hydraulic increment. The larger the number, the more time between Hydraulic increments, thus giving more time to reach maximum barrel speed.
- (**<**) Entering this key will now store new settings & return you to main menus (1-16)

Menu 9
To turn on or off transit feed back

- **(>**)enter menu 9, Then using the + - keys, to set number count to (0 or 1).
- Setting this number to 0 zero will turn on transit feed back.
- Setting this number to 1 will turn off transit feed back..
- (**<**) Entering this key will now store new settings & return you to main menus (1-16)

Menu 10
To turn on or off Transit barrel speed lock (Concrite)

- **(>)**enter menu 10, Then using the + - keys, to set number count to (0 or 1).
- Setting this number to 0 zero will turn on TBSL.
- Setting this number to 1 will turn off TBSL
- (<) Entering this key will now store new settings & return you to main menus (1-16)

Menu 11
To turn on or off closed loop feed back

This Menu turns on or off (barrel speed sensor) fitted to hydraulic motor and will read out speed at which barrel is turning

- **(>)**enter menu 11, Then using the + - keys, to set number count to (0 or 1).
- Setting this number to 0 zero will turn on Closed loop feed back.
- Setting this number to 1 will turn off Closed loop feed back.
- (<) Entering this key will now store new settings & return you to main menus (1-16)

Menu 12
Throttle Increment

This setting adjusts how many single button presses from idle to full throttle, from a possible range of 1 - 255 steps. So if the number count on screen is set to 1 there will be 255 button presses, similarly if setting is changed to 10 there will be only 25 steps.

(>)enter menu 12, to change throttle increment setting

- Using + or – keys to change value
- (<) Entering this key will now store new settings & return you to main menus (1-16)
- (**Escape**) Entering this key will return you back one level to main menu tree.

Menu 13
Hydraulic Increment

This setting adjusts how many single button presses from idle to full barrel speed, from a possible range of 1 - 255 steps. So if the number count on screen is set to 1 there will be 255 button presses, similarly if setting is changed to 10 there will be only 25 steps.

(>)enter menu 13, to change Hydraulic increment setting

- Using + or – keys to change value
- (<) Entering this key will now store new settings & return you to main menus (1-16)
- (**Escape**) Entering this key will return you back one level to main menu tree.

Menu 14
Set Neutral Switch Input

(>)enter menu 14, to change Neutral switch input.

Setting this value to 0 will allow a negative neutral input with neutral jumper on.
Setting this value to 1 will allow a Positive neutral input with neutral jumper off.

- Using + or – keys to change value
- (<) Entering this key will now store new settings & return you to main menus (1-16)
- (**Escape**) Entering this key will return you back one level to main menu tree.

Menu 15
RS485 Yes/No

(>)enter menu 15, to change radio to either on board radio or RS485 external radio.

Setting this value to 0= external RS485 Radio remote
Setting this value to 1= Internal Radio remote

- Using + or – keys to change value
- (<) Entering this key will now store new settings & return you to main menus (1-15)
- (**Escape**) Entering this key will return you back one level to main menu tree.

Pinouts

PLUG/No	FUNCTION	Wire Length	JOIN	COLOUR		
1	NEGATIVE 0VDC	1/4		BLACK	GRD	
2	POWER SUPPLY 12/24VDC	1/4		RED		
3	REVS DN/	1/4		YELLOW	T1	
4	COMM/	1/4		PINK	T1	
5	REVS UP/	1/4		GREEN	T1	
6	E/STOP SIG RET	1/18		BLUE/WHITE		
7	E/STOP SIGNAL	1/14		BLUE/YELLOW		
8	NEUTRAL INPUT 114 NEG	1/4		BROWN		
9	Speed Input	1/7		Gray/Blue		
10	TACHO INPUT P2	1/4		GRAY		
11	(5V ECM)	1/4		ORANGE/YELLOW	T2	
12	(SIG ECM)	1/4		ORANGE/BLUE	T2	
13	(ECM 0V)	1/4		ORANGE 2MM	T2	
14	EDC	1/18		RED/BLACK	H0	
15	EDC	1/14		RED/BROWN	H0	
16	GPS OUTPUT 10V 25MA	1/4		BROWN/YELLOW		
17	I/O GPS/CRUISE ON	1/4		VIOLET/RED		
18	PWM1	1/7		RED/BLACK	H1	
19	PWM/GND	1/.25	1	BLACK		
20	PWM2	1/7		RED/BROWN	H1	
21	HORN	1/4		BROWN/WHITE		
22	FLOOD	1/14		BLUE		
23	GRND	1/14	1	BLACK/WHITE		
24	OUTPUTS POS	1/4		BLUE/ORANGE		
25	CHUTE DN	1/7		BLUE/BLACK		
26	CHUTE UP	1/7		GREEN/BLACK		
27	CHUTE POSITIVE	1/.25	J28	WHITE 3MM		
28	POWER SUPPLY FAN	1/6	J27	WHITE		
29	FAN 12V RELAY OUTPUT	1/7		PURPLE 2MM		
30	Brake light SW Input	1/4		GREEN/WHITE		
31	RS485 + V Red/Yellow	1/7		White	Twisted Pair 1	1
32	RS485 B Yellow/Red	1/7		BLACK	Twisted Pair 2	3
33	RS485 A Green/Red	1/7		White	Twisted Pair 2	4
34	RS485 0V Black/Yellow	1/7		BLACK	Twisted Pair 1	2

REXROTH	PWM/POS/IN		2	RED/WHITE
REXROTH	PWM/POS/OUT		2	RED/WHITE
Chute Negative		1/7	1	BLACK/White

Menu 14- **To set Neutral switch input (1= positive/ link removed.) (0= negative/ link on)**
Menu 15- **To set RS485 Radio Remote (1 = RS485 remote) (0 = on board aerial)**

DIP SWITCH SETTINGS.

Switches are found inside CCU V5 on top display board.

Switches 1 and 2 Set **Throttle choice** Switches 3 and 4 Set **Hydraulic choice**

	THROTTLE SW 1 AND 2		**HYDRAULICS SW 3 AND 4**	
	SWICTH **1**	SWITCH **2**	SWITCH **3**	SWITCH **4**
TO = Linear Actuator	Off	Off		
T1 = Cruise control	On	Off		
T2 =Remote throttle	Off	On		
T3 = Nematic throttle	On	On		
H0 = Sundstrand EDC			Off	Off
H1 = Rexroth			On	Off

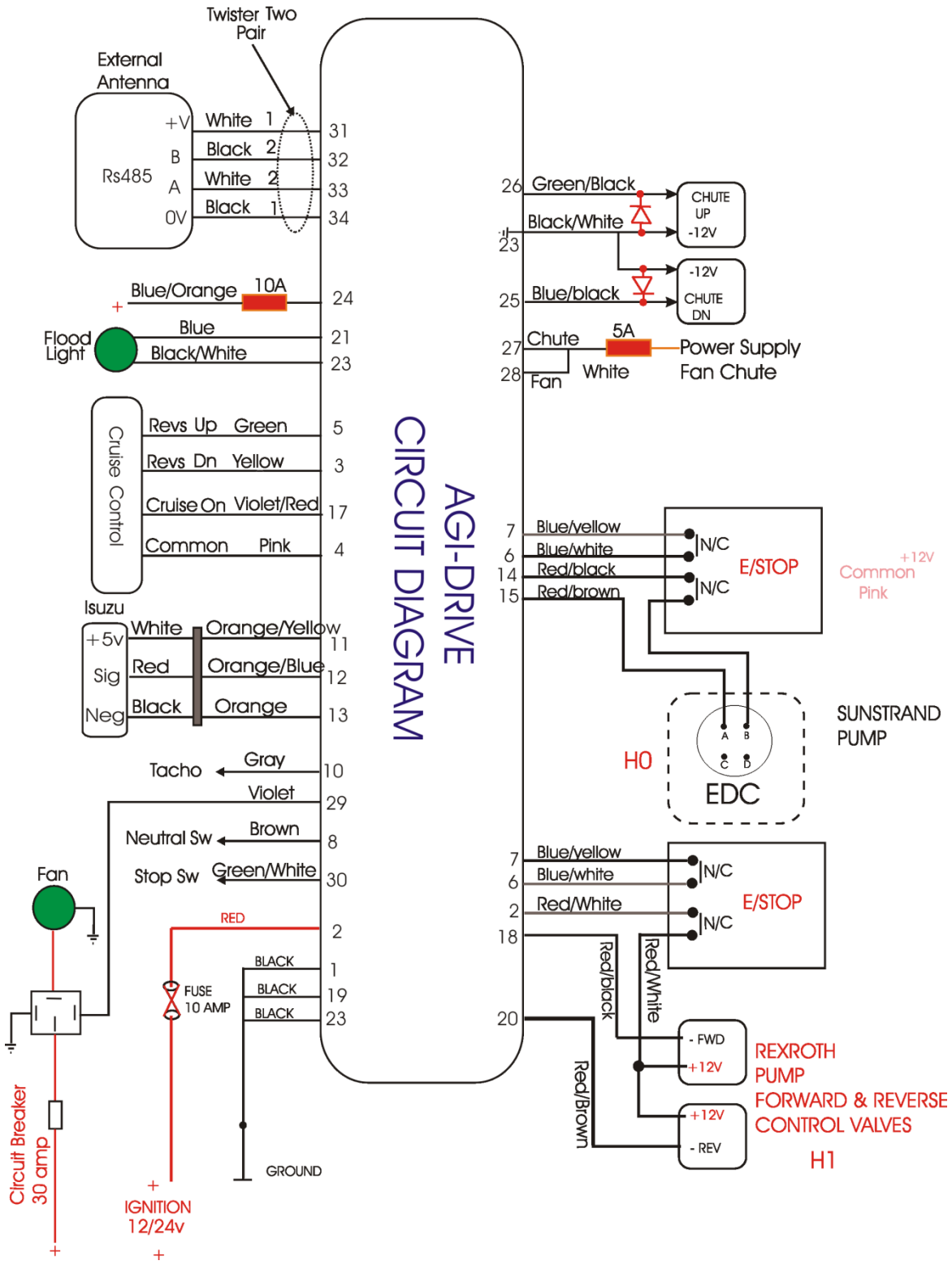
AGI-DRIVE
CIRCUIT DIAGRAM
Twister Two Pair
External Antenna
Rs485
+V
B
A
0V
White 1
Black 2
White 2
Black 1
31
32
33
34
Blue/Orange
10A
24
Flood Light
Blue
Black/White
21
23
Cruise Control
Revs Up Green
Revs Dn Yellow
Cruise On Violet/Red
Common Pink
5
3
17
4
Isuzu
+5v
Sig
Neg
White
Red
Black
Orange/Yellow
Orange/Blue
Orange
11
12
13
Tacho
Gray
10
Violet
29
Neutral Sw
Brown
8
Stop Sw
Green/White
30
Fan
RED
2
BLACK
1
BLACK
19
BLACK
23
FUSE
10 AMP
Circuit Breaker
30 amp
IGNITION
12/24v
GROUND
26 Green/Black
Black/White
23
CHUTE UP
-12V
-12V
CHUTE DN
25 Blue/black
27 Chute
5A
Power Supply
Fan Chute
28 Fan
White
7 Blue/yellow
6 Blue/white
14 Red/black
15 Red/brown
N/C
N/C
E/STOP
+12V
Common
Pink
SUNSTRAND
PUMP
H0
A
B
C
D
EDC
7 Blue/yellow
6 Blue/white
2 Red/White
18
N/C
N/C
E/STOP
Red/black
Red/White
20
Red/Brown
- FWD
+12V
+12V
- REV
REXROTH
PUMP
FORWARD & REVERSE
CONTROL VALVES
H1

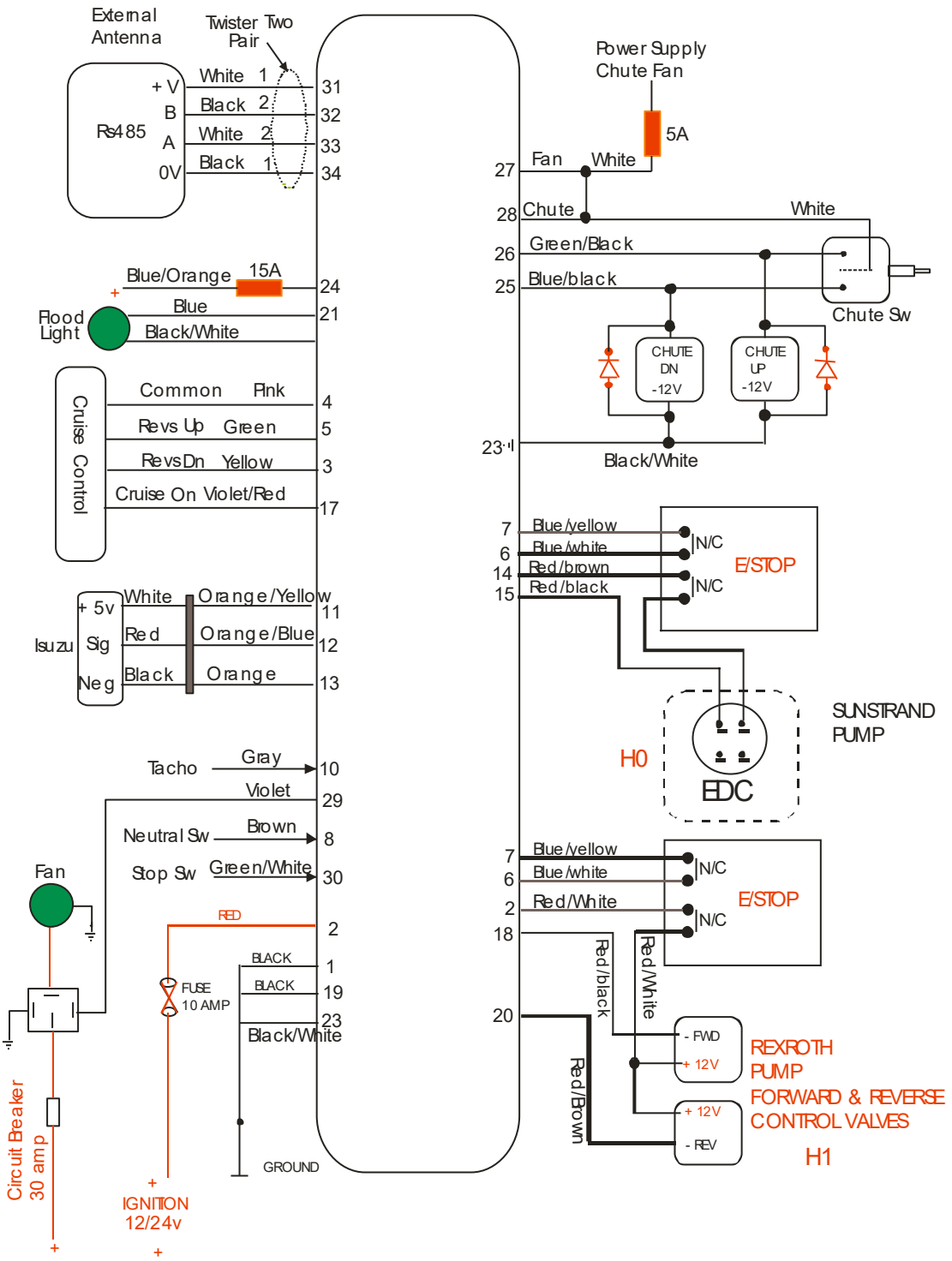
External Antenna
Twister Two Pair
Rs485
+ V
B
A
0V
White 1
Black 2
White 2
Black 1
31
32
33
34
Power Supply Chute Fan
5A
27 Fan White
28 Chute
White
26 Green/Black
25 Blue/black
Chute Sw
Blue/Orange 15A
24
Flood Light
Blue
21
Black/White
CHUTE DN -12V
CHUTE UP -12V
23
Black/White
Cruise Control
Common Pink 4
Revs Up Green 5
Revs Dn Yellow 3
Cruise On Violet/Red 17
7 Blue/yellow
6 Blue/white
14 Red/brown
15 Red/black
N/C
N/C
E/STOP
Isuzu
+ 5v
Sig
Neg
White
Red
Black
Orange/Yellow 11
Orange/Blue 12
Orange 13
SUNSTRAND PUMP
H0
EDC
Tacho Gray 10
Violet 29
Neutral Sw Brown 8
Stop Sw Green/White 30
Fan
7 Blue/yellow
6 Blue/white
2 Red/White
18
N/C
N/C
E/STOP
RED
2
BLACK
1
BLACK
19
23
Black/White
FUSE 10 AMP
20
Red/black
Red/White
Red/Brown
- FWD
+ 12V
+ 12V
- REV
REXROTH PUMP
FORWARD & REVERSE CONTROL VALVES
H1
GROUND
Circuit Breaker 30 amp
IGNITION 12/24v